LUBING
A Tradition of Innovation.
135 Corporate Drive SW
Cleveland, TN 37311
(423) 709-1000 Phone
(423) 709-1001 Fax

DOCUMENTATION

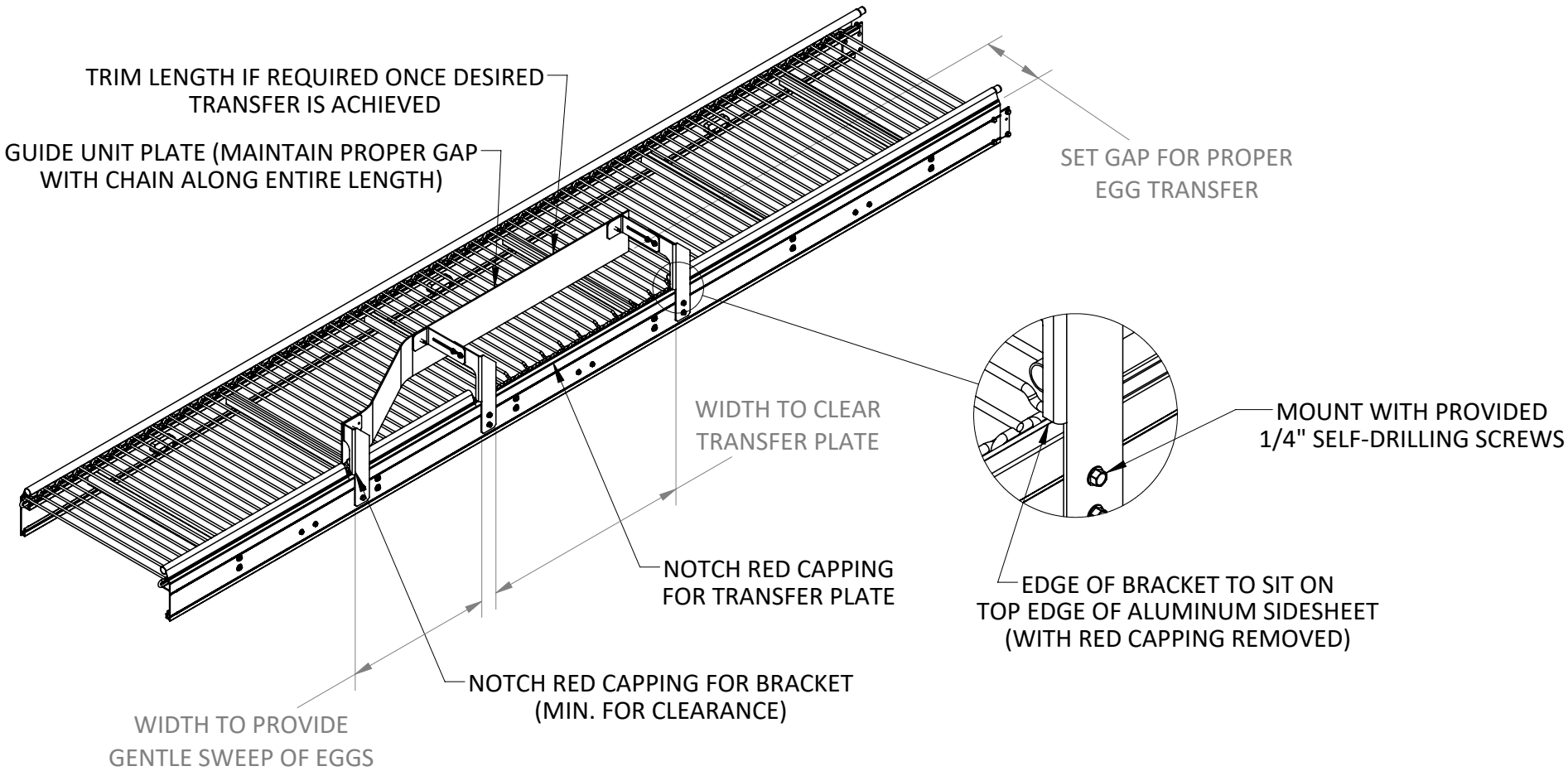

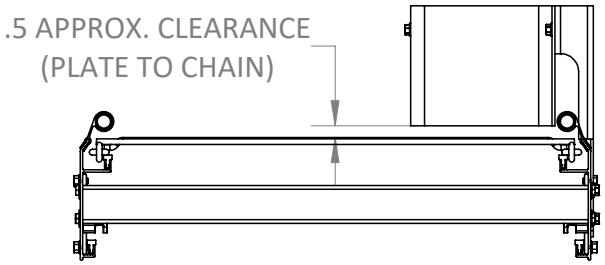

PART NO.	DESCRIPTION
15W A 001 00A	Guide Unit, All Types